THERMAL ANALYSIS

UNIVERSAL CRIMPER PRESS

User's Guide

PerkinElmer®

Release History

Part Number	Release	Publication Date
B0144748	D	May 2013

Any comments about the documentation for this product should be addressed to:

User Assistance
PerkinElmer Ltd
Chalfont Road
Seer Green
Beaconsfield
Bucks HP9 2FX
United Kingdom

Or emailed to: info@perkinelmer.com

Notices
The information contained in this document is subject to change without notice.
Except as specifically set forth in its terms and conditions of sale, PerkinElmer makes no warranty of any kind with regard to this document, including, but not limited to, the implied warranties of merchantability and fitness for a particular purpose.
PerkinElmer shall not be liable for errors contained herein for incidental consequential damages in connection with furnishing, performance or use of this material.

Copyright Information
This document contains proprietary information that is protected by copyright.
All rights are reserved. No part of this publication may be reproduced in any form whatsoever or translated into any language without the prior, written permission of PerkinElmer, Inc.

Copyright © 2013 PerkinElmer, Inc.

Produced in the USA.

Trademarks
Registered names, trademarks, etc. used in this document, even when not specifically marked as such, are protected by law.

PerkinElmer is a registered trademark of PerkinElmer, Inc.

Contents

Conventions Used in this Manual 4
Notes and Cautions 4
Introduction 5
Operation 6
Important Handling Tips 6
Using the Suction Manipulator 6
Encapsulating Samples 6
Maintenance 8
General Care 8
Removing/Replacing The Plunger 9
CP Accessory 10
Description 10
Installation 10
Replacement Parts and Consumables 11
Replacement Parts 11
Consumables 12

Conventions Used in this Manual

Normal text is used to provide information and instructions.

Bold text refers to text that is displayed on the screen.

UPPERCASE text, for example ENTER or ALT, refers to keys on the PC keyboard. '+' is used to show that you have to press two keys at the same time, for example, ALT+F.

All eight-digit numbers are PerkinElmer part numbers unless stated otherwise.

Notes and Cautions

Two terms, in the following standard formats, are also used to highlight special circumstances and warnings.

NOTE: A note indicates additional, significant information that is provided with some procedures.

CAUTION	*We use the term CAUTION to inform you about situations that could result in serious damage to the instrument or other equipment. Details about these circumstances are in a box like this one.*

Introduction

The Universal Crimper Press (Figure 1) is designed for sealing sample pans for use in thermal analysis and similar applications. Through the force applied by the press, the sample pan and the cover are sealed by cold welding. An ideal gas-tight seal is thus guaranteed for sealed sample pans.

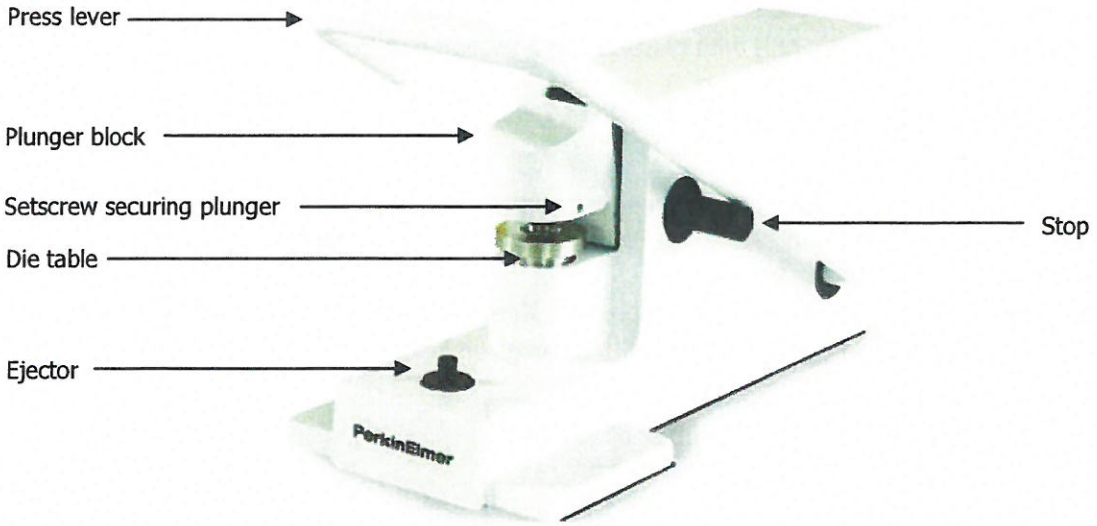

Figure 1 Universal Crimper Press

With the Optional CP Accessory (Part No. B014-4637), sample pans can be reliably sealed for performing specific heat (Cp) determinations.

The following items are provided:

Item	Part Number	Quantity
Universal Crimper Press	B013-9005	1
Standard Die	B013-9033	1
Shear Ring	B014-6655	1
Standard Suction Manipulator	B014-3263	1
Sleeves	B013-9012	3
Insert for 50 µL pans	B015-2171	1
Insert for 30 µL pans	B015-2172	1
Insert for 10 µL pans	B015-2173	1
Socket Wrench, 2 mm	0990-7917	1
User's Guide	B014-4748	1

Operation

Important Handling Tips

- Do not handle sample pans or covers with bare fingers. Contamination of the pans or covers with body oils can lead to false results.
  Handle the pans and covers only with tweezers or a suction manipulator.

- Sample pans to be used for the determination of specific heats should be baked out for 10 minutes at 370 °C.

- To prevent the bottom of the sample pan from being deformed when encapsulating hard samples, the appropriate insert should be placed into the die when such samples are being handled.
  To accommodate the various sizes of sample pan, three inserts are provided with the press.
  The inserts are identified by the number of rings as given below:

Insert for	Number of Rings
50 µl sample pans	1
30 µl sample pans	2
10 µl sample pans	3

If hard samples are to be encapsulated in the strengthened sample pans with 0.15 mm wall thickness, use the 1-ring insert for 50 µl sample pans, and the 2-ring insert for 25 µl sample pans.

Using the Suction Manipulator

1. Squeeze the plastic tube.

2. Press the suction cup onto the sample pan or cover to be transported, and release the plastic tube.

3. Squeeze the plastic tube to release the sample pan or cover.

Encapsulating Samples

Refer to Figure 2:

1. Place the sample into the sample pan.
   If required, weigh the sample into the pan.

2. Using tweezers, place the sample pan carefully into the die.
   The die is double-sided and may be used either way.

3. Using the suction manipulator, place the cover carefully onto the pan.
   Take care not to disturb the sample in the pan.

4. Shift the press lever fully to the rear position.

5. Carefully place the die containing the sample pan onto the die table.
   If hard samples are to be encapsulated, place the correct insert under the die beforehand. Make certain that the cover has not shifted on the sample pan.

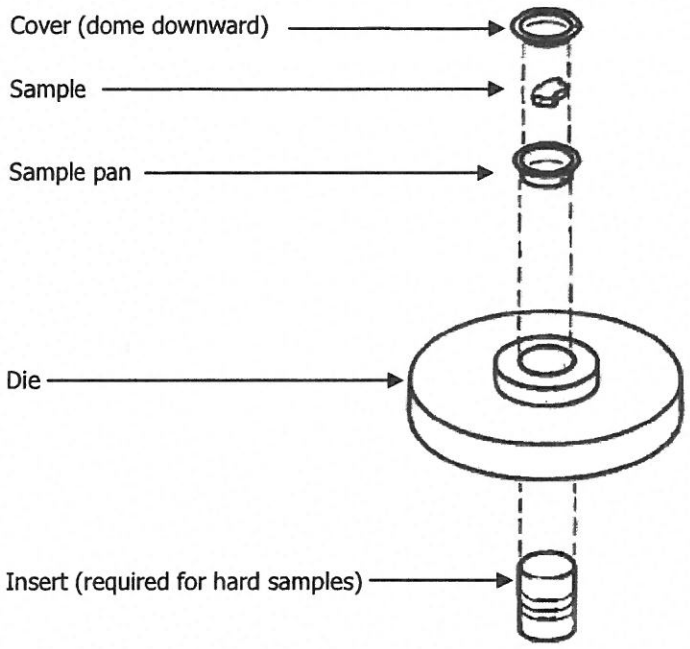

Figure 2 Encapsulating a sample

6. Pull the press lever forward with a steady pressure to the stop. Hold the lever for about 5 seconds in this position and then return it to the rear position.

CAUTION	*Do not let go of the lever and allow it to fly back. This can damage the press. Always return the lever to the rear position by hand.*

7. Remove the die containing the sealed pan from the die table and place it onto the ejector.

8. Place the shear ring, cone upward, onto the die.

9. Press the shear ring evenly downward to shear off excess extruded material cleanly from the rim of the sample pan.

NOTE: If the rim of the sample pan is already cleanly separated during crimping, it is not necessary to use the shear ring.

10. Press down on the die to eject the sealed sample pan.

11. Using the suction manipulator, transport the sample pan to the thermal analysis instrument.

Maintenance

General Care

The Universal Crimper Press requires little maintenance other than to keep it clean and free of dust.

The press may start to seal poorly after a large number of operations due to the accumulation of aluminum around the die. The die, die table and plunger should therefore be checked regularly and wiped with a soft tissue. The plastic sleeve on the plunger can be pulled off to aid cleaning.

CAUTION *Never attempt to scrape metal residues from any of these components using metal tools.*

NOTE: If the aluminum that has accumulated on the die or plunger cannot be removed by wiping with a tissue, the components can be placed in 15% hydrochloric acid for 10 to 15 minutes. After leaching in hydrochloric acid, the components should be well rinsed with deionized water and thoroughly dried.

The sleeve on the plunger can be pulled off and should be replaced if it shows signs of wear or damage. Three replacement sleeves (Part No. 8013-9012) are provided with the press. The sleeves are made of a special carbon-filled silicone rubber; genuine PerkinElmer replacements only should be used.

If, after prolonged use, the press fails to seal properly, the die table may need adjustment. This should be referred to a PerkinElmer Service Representative. The user is advised not to attempt any adjustments to the press.

Removing/Replacing The Plunger

The plunger is double-faced. If one face becomes worn or damaged, the plunger can be removed as follows (refer to Figure 3).

1. While holding the plunger, unscrew the setscrew using the 2 mm socket wrench provided.
2. Pull the plunger downward to withdraw it.
3. To replace the plunger, insert it into the plunger block and tighten the setscrew.

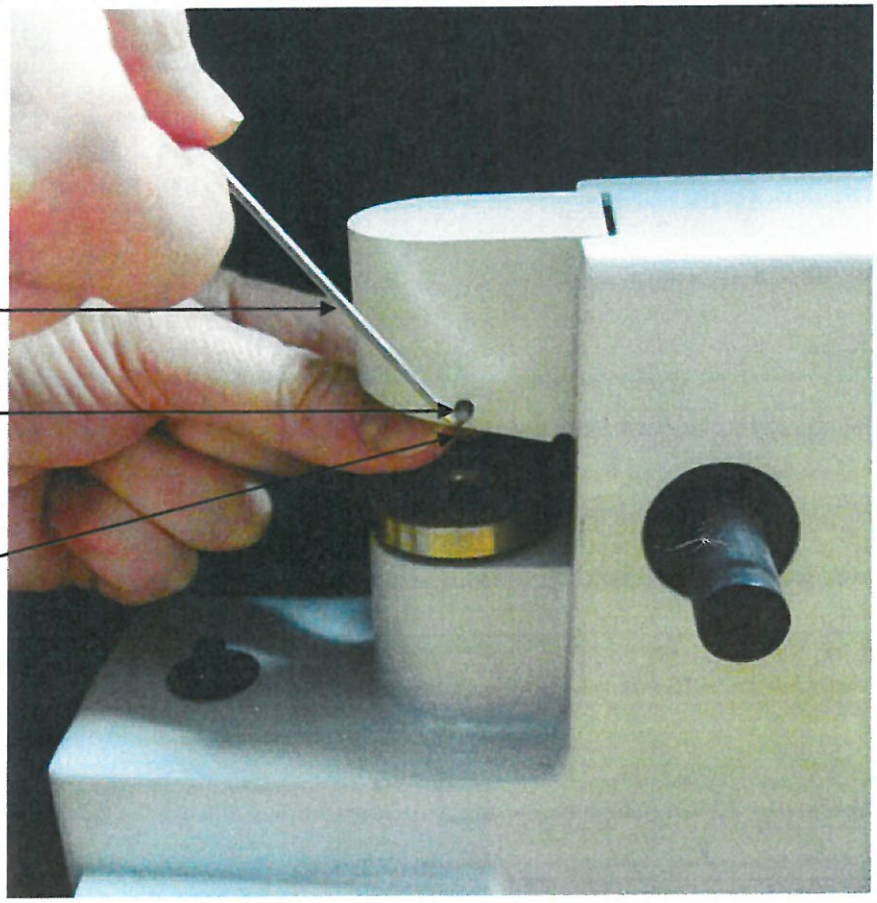

Figure 3 Removing/replacing the plunger

CP Accessory

Description

The CP Accessory (Part No. B014-4637) is an option to permit conversion of the press so that sample pans can be sealed for performing specific heat determinations. The CP Accessory includes a special plunger and die that are exchanged with the standard components.

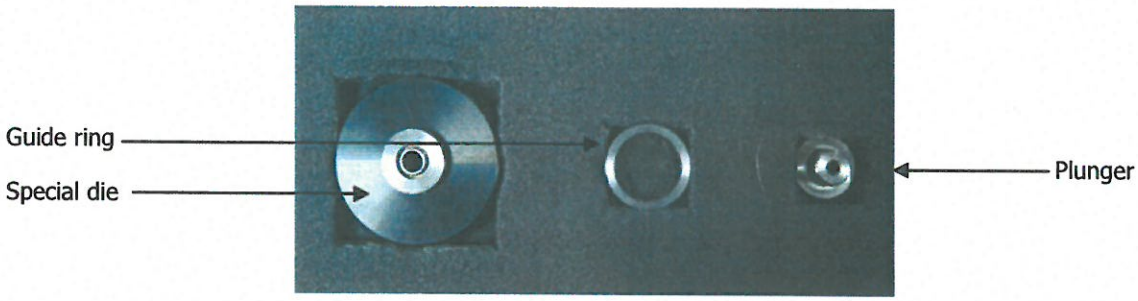

Figure 4 CP Accessory

Installation

1. Remove the standard plunger from the press (refer to *Removing/Replacing The Plunger* on page 8).
2. Insert the special CP Accessory plunger into the plunger block and tighten the setscrew.
3. Exchange the standard die for the special CP Accessory die.

NOTE: When using the press with the CP Accessory, always place the guide ring provided on the die (refer to Figure 5) to ensure that the plunger is centered exactly.

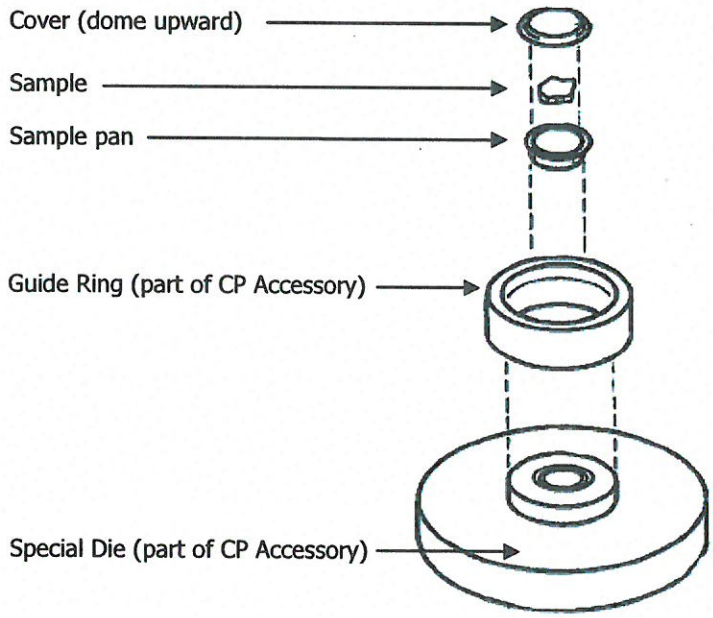

Figure 5 Encapsulating a sample for specific heat (Cp) determination

Replacement Parts and Consumables

Replacement Parts

Item	Part Number
Standard Plunger	B013-9013
Plunger Sleeve	B013-9012
Standard Die	B013-9033
Shear Ring	B014-6655
Insert for 50 µl sample pans	B015-2171
Insert for 30 µl sample pans	B015-2172
Insert for 10 µl sample pans	B015-2173
Standard Suction Manipulator	B014-3263
Deluxe Manipulator	B014-2512
Special Plunger for CP Accessory	B014-4634
Special Die for CP Accessory	B014-6630
Guide Ring for CP Accessory	B014-9536

Consumables

Item	Part Number
Aluminum Pan Starter Set (includes 50 each of the various aluminum pans and 350 pan covers)	B014-6340
Aluminum Pan Set (includes 400 each of the various aluminum pans and 2000 pan covers)	B014-3030
Unvented Aluminum Sample Pans, max. 1 bar internal pressure, 0.1 mm wall thickness. Pack of 400 each:	
10 µl volume	B014-3015
30 µl volume	B014-3016
50 µl volume	B014-3017
Vented Aluminum Sample Pans, 0.1 mm wall thickness with 4 openings. Pack of 400 each:	
30 µl volume	B014-3018
50 µl volume	B014-3019
Aluminum Pan Covers, 0.1 mm wall thick:	
Pack of 400	B014-3003
Pack of 2000	B014-3040
Unvented Aluminum Sample Pans, max. 2 bar internal pressure, 0.15 mm wall thickness. Pack of 400 each:	
25 µl volume	B014-3020
50 µl volume	B014-3021
Aluminum Pan Covers 0.15 mm thick:	
Pack of 400	B014-3004
Pack of 800	B014-3050
Unvented Gold Sample Pans, max. 1 bar internal pressure, 0.1 mm wall thickness (includes 10 each of the various gold pans and 20 gold pan covers):	
10 µl volume	B014-3023
50 µl volume	B014-3024

Item	Part Number
Gold Pan Covers, 0.1 mm thick:	
Pack of 10	B014-3005
Pack of 20	B014-3060